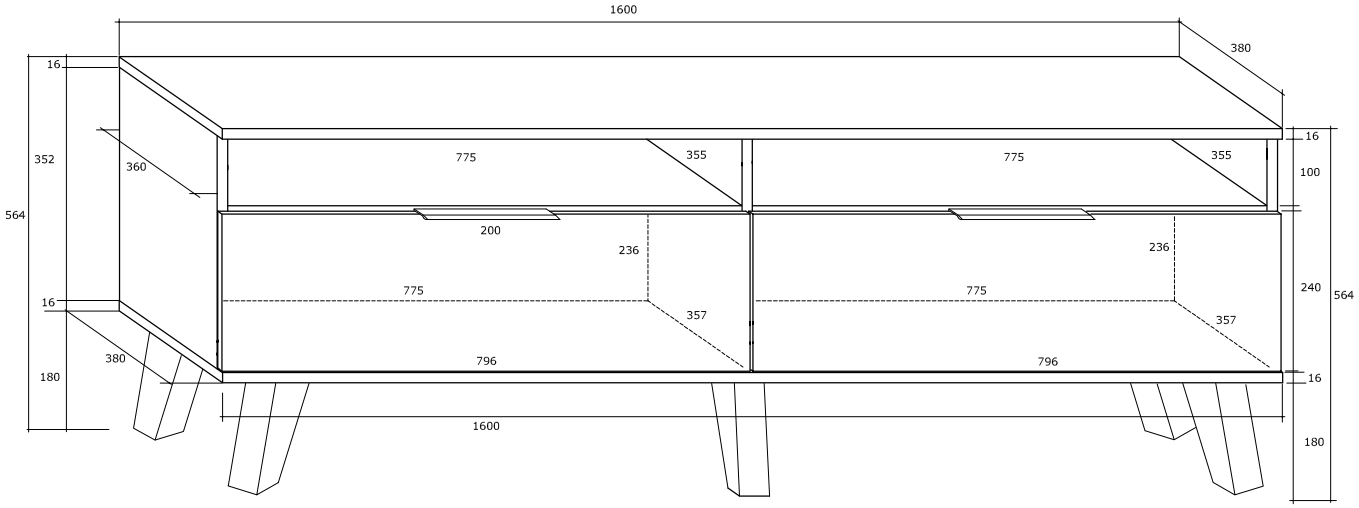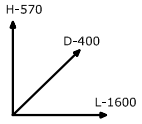SVN-11
STOLIK RTV 2D